RADIAL CONTACT, C-TYPE

THIN SECTION BALL BEARINGS

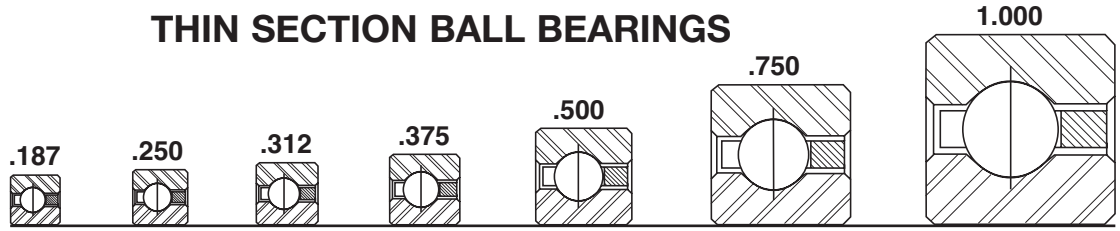

Series:	SAA	SA	SB	SC	SD	SF	SG
Cross Section Size:	3/16"	1/4"	5/16"	3/8"	1/2"	3/4"	1"

PART NUMBER*	NOMINAL DIMENSIONS												
	B Bore		D Outside Diameter		W Width		Land Diameter L_i -Inner Ring		Land Diameter L_o -Outer Ring		f_1 Housing Fillet		Ball Diameter
	in.	mm	in.	mm	in.	mm	in.	mm	in.	mm	in.	mm	in.
SAA10CL0*RBC	1.0000	25.400	1.3750	34.925	0.1875	4.763	1.141	28.98	1.234	31.34	0.015	0.38	3/32
SAA15CL0*RBC	1.5000	38.100	1.8750	47.625	0.1875	4.763	1.641	41.68	1.734	44.04	0.015	0.38	3/32
SAA17CL0*RBC	1.7500	44.450	2.1250	53.975	0.1875	4.760	1.890	48.00	1.985	50.42	0.015	0.38	3/32
SA020CP0*RBC	2.0000	50.800	2.5000	63.500	0.2500	6.350	2.188	55.58	2.313	58.75	0.025	0.64	1/8
SB020CP0*RBC	2.0000	50.800	2.6250	66.675	0.3125	7.938	2.234	56.74	2.391	60.73	0.032	0.81	5/32
SA025CP0*RBC	2.5000	63.500	3.0000	76.200	0.2500	6.350	2.688	68.28	2.813	71.45	0.025	0.64	1/8
SB025CP0*RBC	2.5000	63.500	3.1250	79.375	0.3125	7.938	2.734	69.44	2.891	73.43	0.032	0.81	5/32
SA030CP0*RBC	3.0000	76.200	3.5000	88.900	0.2500	6.350	3.188	80.98	3.313	84.15	0.025	0.64	1/8
SB030CP0*RBC	3.0000	76.200	3.6250	92.075	0.3125	7.938	3.234	82.14	3.391	86.13	0.032	0.81	5/32
SA035CP0*RBC	3.5000	88.900	4.0000	101.600	0.2500	6.350	3.688	93.68	3.813	96.85	0.025	0.64	1/8
SB035CP0*RBC	3.5000	88.900	4.1250	104.775	0.3125	7.938	3.734	94.84	3.897	98.98	0.032	0.81	5/32
SA040CP0*RBC	4.0000	101.600	4.5000	114.300	0.2500	6.350	4.188	106.38	4.313	109.55	0.025	0.64	1/8
SB040CP0*RBC	4.0000	101.600	4.6250	117.475	0.3125	7.938	4.234	107.54	4.391	111.53	0.032	0.81	5/32
SC040CP0*RBC	4.0000	101.600	4.7500	120.650	0.3750	9.525	4.281	108.74	4.469	113.51	0.040	1.02	3/16
SD040CP0*RBC	4.0000	101.600	5.0000	127.000	0.5000	12.700	4.375	111.13	4.625	117.48	0.060	1.52	1/4
SF040CP0*RBC	4.0000	101.600	5.5000	139.700	0.7500	19.050	4.563	115.90	4.938	125.43	0.080	2.03	3/8
SG040CP0*RBC	4.0000	101.600	6.0000	152.400	1.0000	25.400	4.750	120.65	5.250	133.35	0.080	2.03	1/2
SA042CP0*RBC	4.2500	107.950	4.7500	120.650	0.2500	6.350	4.438	112.73	4.563	115.90	0.025	0.64	1/8
SB042CP0*RBC	4.2500	107.950	4.8750	123.825	0.3125	7.938	4.484	113.89	4.641	117.88	0.032	0.81	5/32
SC042CP0*RBC	4.2500	107.950	5.0000	127.000	0.3750	9.525	4.531	115.09	4.719	119.86	0.040	1.02	3/16
SD042CP0*RBC	4.2500	107.950	5.2500	133.350	0.5000	12.700	4.625	117.48	4.875	123.83	0.060	1.52	1/4
SF042CP0*RBC	4.2500	107.950	5.7500	146.050	0.7500	19.050	4.813	122.25	5.188	131.78	0.080	2.03	3/8
SG042CP0*RBC	4.2500	107.950	6.2500	158.750	1.0000	25.400	5.000	127.00	5.500	139.70	0.080	2.03	1/2
SA045CP0*RBC	4.5000	114.300	5.0000	127.000	0.2500	6.350	4.688	119.08	4.813	122.25	0.025	0.64	1/8
SB045CP0*RBC	4.5000	114.300	5.1250	130.175	0.3125	7.938	4.734	120.24	4.891	124.23	0.032	0.81	5/32
SC045CP0*RBC	4.5000	114.300	5.2500	133.350	0.3750	9.525	4.781	121.44	4.969	126.21	0.040	1.02	3/16
SD045CP0*RBC	4.5000	114.300	5.5000	139.700	0.5000	12.700	4.875	123.83	5.125	130.18	0.060	1.52	1/4
SF045CP0*RBC	4.5000	114.300	6.0000	152.400	0.7500	19.050	5.063	128.60	5.438	138.13	0.080	2.03	3/8
SG045CP0*RBC	4.5000	114.300	6.5000	165.100	1.0000	25.400	5.250	133.35	5.750	146.05	0.080	2.03	1/2
SA047CP0*RBC	4.7500	120.650	5.2500	133.350	0.2500	6.350	4.938	125.43	5.063	128.60	0.025	0.64	1/8
SB047CP0*RBC	4.7500	120.650	5.3750	136.525	0.3125	7.938	4.984	126.59	5.141	130.58	0.032	0.81	5/32
SC047CP0*RBC	4.7500	120.650	5.5000	139.700	0.3750	9.525	5.031	127.79	5.219	132.56	0.040	1.02	3/16
SD047CP0*RBC	4.7500	120.650	5.7500	146.050	0.5000	12.700	5.125	130.18	5.375	136.53	0.060	1.52	1/4
SF047CP0*RBC	4.7500	120.650	6.2500	158.750	0.7500	19.050	5.313	134.95	5.688	144.48	0.080	2.03	3/8
SG047CP0*RBC	4.7500	120.650	6.7500	171.450	1.0000	25.400	5.500	139.70	6.000	152.40	0.080	2.03	1/2
SA050CP0*RBC	5.0000	127.000	5.5000	139.700	0.2500	6.350	5.188	131.78	5.313	134.95	0.025	0.64	1/8
SB050CP0*RBC	5.0000	127.000	5.6250	142.875	0.3125	7.938	5.234	132.94	5.391	136.93	0.032	0.81	5/32
SC050CP0*RBC	5.0000	127.000	5.7500	146.050	0.3750	9.525	5.281	134.14	5.469	138.91	0.040	1.02	3/16
SD050CP0*RBC	5.0000	127.000	6.0000	152.400	0.5000	12.700	5.375	136.53	5.625	142.88	0.060	1.52	1/4
SF050CP0*RBC	5.0000	127.000	6.5000	165.100	0.7500	19.050	5.563	141.30	5.938	150.83	0.080	2.03	3/8
SG050CP0*RBC	5.0000	127.000	7.0000	177.800	1.0000	25.400	5.750	146.05	6.250	158.75	0.080	2.03	1/2
SA055CP0*RBC	5.5000	139.700	6.0000	152.400	0.2500	6.350	5.688	144.48	5.813	147.65	0.025	0.64	1/8
SB055CP0*RBC	5.5000	139.700	6.1250	155.575	0.3125	7.938	5.734	145.64	5.891	149.63	0.032	0.81	5/32
SC055CP0*RBC	5.5000	139.700	6.2500	158.750	0.3750	9.525	5.781	146.84	5.969	151.61	0.040	1.02	3/16
SD055CP0*RBC	5.5000	139.700	6.5000	165.100	0.5000	12.700	5.875	149.23	6.125	155.58	0.060	1.52	1/4
SF055CP0*RBC	5.5000	139.700	7.0000	177.800	0.7500	19.050	6.063	154.00	6.438	163.53	0.080	2.03	3/8

*The alphanumeric identification system is used under license.

- 440C Stainless Steel
- Large Diameter
- Light Weight
- Small Cross Section
- Snap-Over Ball Separator

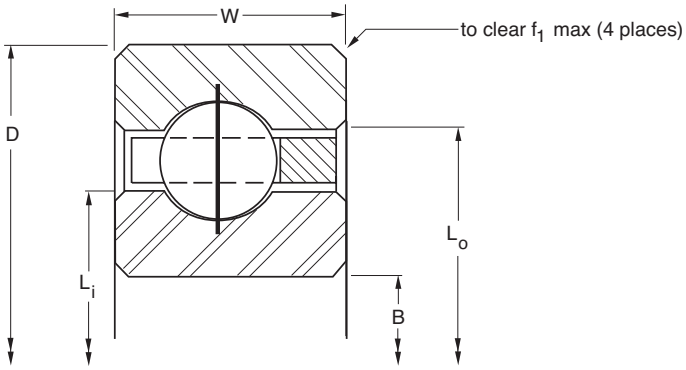

Ball Quantity	Approx. Weight lbs.	Approx. Weight kg	Radial Static lbf	Radial Static N	Radial Dynamic lbf	Radial Dynamic N	Thrust Static lbf	Thrust Static N	Thrust Dynamic lbf	Thrust Dynamic N	Moment Static lbf - in	Moment Static Nm	Moment Dynamic lbf - in	Moment Dynamic Nm	PART NUMBER*
22	0.03	0.014	290	1,290	300	1,330	N/A	N/A	N/A	N/A	N/A	N/A	N/A	N/A	SAA10CL0*RBC
30	0.04	0.018	400	1,780	350	1,560	N/A	N/A	N/A	N/A	N/A	N/A	N/A	N/A	SAA15CL0*RBC
33	0.06	0.027	460	2,050	371	1,650	N/A	N/A	N/A	N/A	N/A	N/A	N/A	N/A	SAA17CL0*RBC
27	0.10	0.045	680	3,020	560	2,490	N/A	N/A	N/A	N/A	N/A	N/A	N/A	N/A	SA020CP0*RBC
23	0.16	0.073	930	4,140	800	3,560	N/A	N/A	N/A	N/A	N/A	N/A	N/A	N/A	SB020CP0*RBC
33	0.13	0.059	830	3,690	610	2,710	N/A	N/A	N/A	N/A	N/A	N/A	N/A	N/A	SA025CP0*RBC
28	0.20	0.091	1,140	5,070	860	3,830	N/A	N/A	N/A	N/A	N/A	N/A	N/A	N/A	SB025CP0*RBC
39	0.15	0.068	990	4,400	650	2,890	N/A	N/A	N/A	N/A	N/A	N/A	N/A	N/A	SA030CP0*RBC
33	0.24	0.109	1,340	5,960	920	4,090	N/A	N/A	N/A	N/A	N/A	N/A	N/A	N/A	SB030CP0*RBC
45	0.18	0.082	1,140	5,070	690	3,070	N/A	N/A	N/A	N/A	N/A	N/A	N/A	N/A	SA035CP0*RBC
38	0.27	0.122	1,540	6,850	970	4,310	N/A	N/A	N/A	N/A	N/A	N/A	N/A	N/A	SB035CP0*RBC
51	0.19	0.086	1,290	5,740	720	3,200	N/A	N/A	N/A	N/A	N/A	N/A	N/A	N/A	SA040CP0*RBC
43	0.30	0.136	1,750	7,780	1,020	4,540	N/A	N/A	N/A	N/A	N/A	N/A	N/A	N/A	SB040CP0*RBC
35	0.45	0.204	2,100	9,340	1,290	5,740	N/A	N/A	N/A	N/A	N/A	N/A	N/A	N/A	SC040CP0*RBC
27	0.78	0.354	3,080	13,700	2,250	10,010	N/A	N/A	N/A	N/A	N/A	N/A	N/A	N/A	SD040CP0*RBC
19	1.90	0.862	5,360	23,840	3,940	17,530	N/A	N/A	N/A	N/A	N/A	N/A	N/A	N/A	SF040CP0*RBC
15	3.60	1.633	8,210	36,520	6,700	29,800	N/A	N/A	N/A	N/A	N/A	N/A	N/A	N/A	SG040CP0*RBC
54	0.20	0.091	1,370	6,090	730	3,250	N/A	N/A	N/A	N/A	N/A	N/A	N/A	N/A	SA042CP0*RBC
45	0.31	0.141	1,830	8,140	1,030	4,580	N/A	N/A	N/A	N/A	N/A	N/A	N/A	N/A	SB042CP0*RBC
37	0.47	0.213	2,220	9,880	1,320	5,870	N/A	N/A	N/A	N/A	N/A	N/A	N/A	N/A	SC042CP0*RBC
28	0.83	0.376	3,190	14,190	2,270	10,100	N/A	N/A	N/A	N/A	N/A	N/A	N/A	N/A	SD042CP0*RBC
20	2.00	0.907	5,640	25,090	4,070	18,100	N/A	N/A	N/A	N/A	N/A	N/A	N/A	N/A	SF042CP0*RBC
15	3.80	1.724	8,210	36,520	6,700	29,800	N/A	N/A	N/A	N/A	N/A	N/A	N/A	N/A	SG042CP0*RBC
57	0.22	0.100	1,440	6,410	750	3,340	N/A	N/A	N/A	N/A	N/A	N/A	N/A	N/A	SA045CP0*RBC
48	0.33	0.150	1,950	8,670	1,060	4,720	N/A	N/A	N/A	N/A	N/A	N/A	N/A	N/A	SB045CP0*RBC
39	0.48	0.218	2,340	10,410	1,350	6,010	N/A	N/A	N/A	N/A	N/A	N/A	N/A	N/A	SC045CP0*RBC
30	0.88	0.399	3,420	15,210	2,350	10,450	N/A	N/A	N/A	N/A	N/A	N/A	N/A	N/A	SD045CP0*RBC
21	2.10	0.953	5,930	26,380	4,210	18,730	N/A	N/A	N/A	N/A	N/A	N/A	N/A	N/A	SF045CP0*RBC
16	4.00	1.814	8,760	38,970	7,000	31,140	N/A	N/A	N/A	N/A	N/A	N/A	N/A	N/A	SG045CP0*RBC
60	0.23	0.104	1,520	6,760	760	3,380	N/A	N/A	N/A	N/A	N/A	N/A	N/A	N/A	SA047CP0*RBC
50	0.34	0.154	2,030	9,030	1,070	4,760	N/A	N/A	N/A	N/A	N/A	N/A	N/A	N/A	SB047CP0*RBC
41	0.50	0.227	2,460	10,940	1,370	6,090	N/A	N/A	N/A	N/A	N/A	N/A	N/A	N/A	SC047CP0*RBC
31	0.94	0.426	3,530	15,700	2,360	10,500	N/A	N/A	N/A	N/A	N/A	N/A	N/A	N/A	SD047CP0*RBC
22	2.20	0.998	6,210	27,620	4,310	19,170	N/A	N/A	N/A	N/A	N/A	N/A	N/A	N/A	SF047CP0*RBC
17	4.10	1.860	9,300	41,370	7,290	32,430	N/A	N/A	N/A	N/A	N/A	N/A	N/A	N/A	SG047CP0*RBC
63	0.24	0.109	1,590	7,070	770	3,430	N/A	N/A	N/A	N/A	N/A	N/A	N/A	N/A	SA050CP0*RBC
53	0.38	0.172	2,150	9,560	1,100	4,890	N/A	N/A	N/A	N/A	N/A	N/A	N/A	N/A	SB050CP0*RBC
43	0.58	0.263	2,590	11,520	1,390	6,180	N/A	N/A	N/A	N/A	N/A	N/A	N/A	N/A	SC050CP0*RBC
33	1.00	0.454	3,760	16,730	2,430	10,810	N/A	N/A	N/A	N/A	N/A	N/A	N/A	N/A	SD050CP0*RBC
23	2.30	1.043	6,490	28,870	4,380	19,480	N/A	N/A	N/A	N/A	N/A	N/A	N/A	N/A	SF050CP0*RBC
18	4.30	1.950	9,850	43,810	7,570	33,670	N/A	N/A	N/A	N/A	N/A	N/A	N/A	N/A	SG050CP0*RBC
69	0.25	0.113	1,750	7,780	800	3,560	N/A	N/A	N/A	N/A	N/A	N/A	N/A	N/A	SA055CP0*RBC
58	0.41	0.186	2,360	10,500	1,130	5,030	N/A	N/A	N/A	N/A	N/A	N/A	N/A	N/A	SB055CP0*RBC
47	0.59	0.268	2,830	12,590	1,440	6,410	N/A	N/A	N/A	N/A	N/A	N/A	N/A	N/A	SC055CP0*RBC
36	1.06	0.481	4,100	18,240	2,510	11,170	N/A	N/A	N/A	N/A	N/A	N/A	N/A	N/A	SD055CP0*RBC
25	2.50	1.134	7,050	31,360	4,540	20,190	N/A	N/A	N/A	N/A	N/A	N/A	N/A	N/A	SF055CP0*RBC

Refer to the Engineering section for load and speed limitations.

RADIAL CONTACT, C-TYPE

THIN SECTION BALL BEARINGS

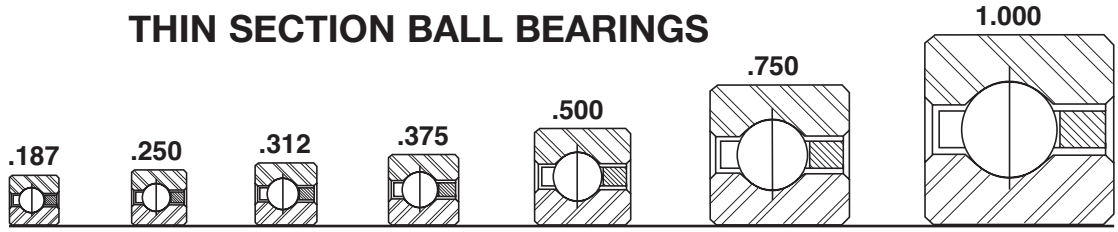

Series:	SAA	SA	SB	SC	SD	SF	SG
Cross Section Size:	3/16"	1/4"	5/16"	3/8"	1/2"	3/4"	1"

PART NUMBER*	NOMINAL DIMENSIONS												
	B Bore		D Outside Diameter		W Width		Land Diameter L_i -Inner Ring		Land Diameter L_o -Outer Ring		f_1 Housing Fillet		Ball Diameter
	in.	mm	in.	mm	in.	mm	in.	mm	in.	mm	in.	mm	in.
SG055CP0*RBC	5.5000	139.700	7.5000	190.500	1.0000	25.400	6.250	158.75	6.750	171.45	0.080	2.03	1/2
SA060CP0*RBC	6.0000	152.400	6.5000	165.100	0.2500	6.350	6.188	157.18	6.313	160.35	0.025	0.64	1/8
SB060CP0*RBC	6.0000	152.400	6.6250	168.275	0.3125	7.938	6.234	158.34	6.391	162.33	0.032	0.81	5/32
SC060CP0*RBC	6.0000	152.400	6.7500	171.450	0.3750	9.525	6.281	159.54	6.469	164.31	0.040	1.02	3/16
SD060CP0*RBC	6.0000	152.400	7.0000	177.800	0.5000	12.700	6.375	161.93	6.625	168.28	0.060	1.52	1/4
SF060CP0*RBC	6.0000	152.400	7.5000	190.500	0.7500	19.050	6.563	166.70	6.938	176.23	0.080	2.03	3/8
SG060CP0*RBC	6.0000	152.400	8.0000	203.200	1.0000	25.400	6.750	171.45	7.250	184.15	0.080	2.03	1/2
SA065CP0*RBC	6.5000	165.100	7.0000	177.800	0.2500	6.350	6.688	169.88	6.813	173.05	0.025	0.64	1/8
SB065CP0*RBC	6.5000	165.100	7.1250	180.975	0.3125	7.938	6.734	171.04	6.891	175.03	0.032	0.81	5/32
SC065CP0*RBC	6.5000	165.100	7.2500	184.150	0.3750	9.525	6.781	172.24	6.969	177.01	0.040	1.02	3/16
SD065CP0*RBC	6.5000	165.100	7.5000	190.500	0.5000	12.700	6.875	174.63	7.125	180.98	0.060	1.52	1/4
SF065CP0*RBC	6.5000	165.100	8.0000	203.200	0.7500	19.050	7.063	179.40	7.438	188.93	0.080	2.03	3/8
SG065CP0*RBC	6.5000	165.100	8.5000	215.900	1.0000	25.400	7.250	184.15	7.750	196.85	0.080	2.03	1/2
SA070CP0*RBC	7.0000	177.800	7.5000	190.500	0.2500	6.350	7.188	182.58	7.313	185.75	0.025	0.64	1/8
SB070CP0*RBC	7.0000	177.800	7.6250	193.675	0.3125	7.938	7.234	183.74	7.391	187.73	0.032	0.81	5/32
SC070CP0*RBC	7.0000	177.800	7.7500	196.850	0.3750	9.525	7.281	184.94	7.469	189.71	0.040	1.02	3/16
SD070CP0*RBC	7.0000	177.800	8.0000	203.200	0.5000	12.700	7.375	187.33	7.625	193.68	0.060	1.52	1/4
SF070CP0*RBC	7.0000	177.800	8.5000	215.900	0.7500	19.050	7.563	192.10	7.938	201.63	0.080	2.03	3/8
SG070CP0*RBC	7.0000	177.800	9.0000	228.600	1.0000	25.400	7.750	196.85	8.250	209.55	0.080	2.03	1/2
SA075CP0*RBC	7.5000	190.500	8.0000	203.200	0.2500	6.350	7.688	195.28	7.813	198.45	0.025	0.64	1/8
SB075CP0*RBC	7.5000	190.500	8.1250	206.375	0.3125	7.938	7.734	196.44	7.891	200.43	0.032	0.81	5/32
SC075CP0*RBC	7.5000	190.500	8.2500	209.550	0.3750	9.525	7.781	197.64	7.969	202.41	0.040	1.02	3/16
SD075CP0*RBC	7.5000	190.500	8.5000	215.900	0.5000	12.700	7.875	200.03	8.125	206.38	0.060	1.52	1/4
SF075CP0*RBC	7.5000	190.500	9.0000	228.600	0.7500	19.050	8.063	204.80	8.438	214.33	0.080	2.03	3/8
SG075CP0*RBC	7.5000	190.500	9.5000	241.300	1.0000	25.400	8.250	209.55	8.750	222.25	0.080	2.03	1/2
SA080CP0*RBC	8.0000	203.200	8.5000	215.900	0.2500	6.350	8.188	207.98	8.313	211.15	0.025	0.64	1/8
SB080CP0*RBC	8.0000	203.200	8.6250	219.075	0.3125	7.938	8.234	209.14	8.391	213.13	0.032	0.81	5/32
SC080CP0*RBC	8.0000	203.200	8.7500	222.250	0.3750	9.525	8.281	210.34	8.469	215.11	0.040	1.02	3/16
SD080CP0*RBC	8.0000	203.200	9.0000	228.600	0.5000	12.700	8.375	212.73	8.625	219.08	0.060	1.52	1/4
SF080CP0*RBC	8.0000	203.200	9.5000	241.300	0.7500	19.050	8.563	217.50	8.938	227.03	0.080	2.03	3/8
SG080CP0*RBC	8.0000	203.200	10.0000	254.000	1.0000	25.400	8.750	222.25	9.250	234.95	0.080	2.03	1/2
SA090CP0*RBC	9.0000	228.600	9.5000	241.300	0.2500	6.350	9.188	233.38	9.313	236.55	0.025	0.64	1/8
SB090CP0*RBC	9.0000	228.600	9.6250	244.475	0.3125	7.938	9.234	234.54	9.391	238.53	0.032	0.81	5/32
SC090CP0*RBC	9.0000	228.600	9.7500	247.650	0.3750	9.525	9.281	235.74	9.469	240.51	0.040	1.02	3/16
SD090CP0*RBC	9.0000	228.600	10.0000	254.000	0.5000	12.700	9.375	238.13	9.625	244.48	0.060	1.52	1/4
SF090CP0*RBC	9.0000	228.600	10.5000	266.700	0.7500	19.050	9.563	242.90	9.938	252.43	0.080	2.03	3/8
SG090CP0*RBC	9.0000	228.600	11.0000	279.400	1.0000	25.400	9.750	247.65	10.250	260.35	0.080	2.03	1/2
SA100CP0*RBC	10.0000	254.000	10.5000	266.700	0.2500	6.350	10.188	258.78	10.313	261.95	0.025	0.64	1/8
SB100CP0*RBC	10.0000	254.000	10.6250	269.875	0.3125	7.938	10.234	259.94	10.391	263.93	0.032	0.81	5/32
SC100CP0*RBC	10.0000	254.000	10.7500	273.050	0.3750	9.525	10.281	261.14	10.469	265.91	0.040	1.02	3/16
SD100CP0*RBC	10.0000	254.000	11.0000	279.400	0.5000	12.700	10.375	263.53	10.625	269.88	0.060	1.52	1/4
SF100CP0*RBC	10.0000	254.000	11.5000	292.100	0.7500	19.050	10.563	268.30	10.938	277.83	0.080	2.03	3/8
SG100CP0*RBC	10.0000	254.000	12.0000	304.800	1.0000	25.400	10.750	273.05	11.250	285.75	0.080	2.03	1/2

*The alphanumeric identification system is used under license.

- 440C Stainless Steel
- Large Diameter
- Light Weight
- Small Cross Section
- Snap-Over Ball Separator

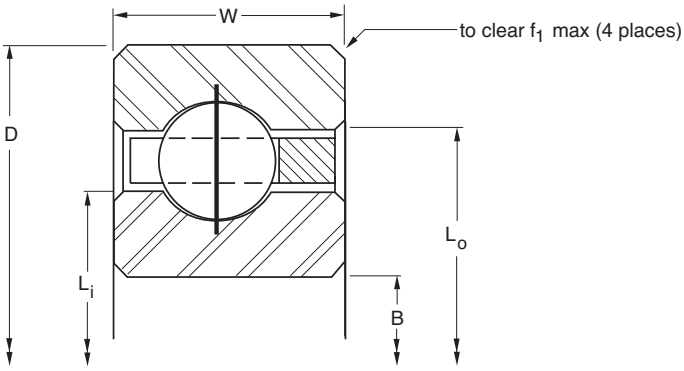

Ball Quantity	Approx. Weight		LOAD RATINGS												PART NUMBER*
			Radial				Thrust				Moment				
			Static		Dynamic		Static		Dynamic		Static		Dynamic		
	lbs.	kg	lbf	N	lbf	N	lbf	N	lbf	N	lbf - in	Nm	lbf - in	Nm	
19	4.70	2.132	10,400	46,260	7,850	34,920	N/A	N/A	N/A	N/A	N/A	N/A	N/A	N/A	SG055CP0*RBC
75	0.28	0.127	1,900	8,450	830	3,690	N/A	N/A	N/A	N/A	N/A	N/A	N/A	N/A	SA060CP0*RBC
63	0.44	0.200	2,560	11,390	1,170	5,200	N/A	N/A	N/A	N/A	N/A	N/A	N/A	N/A	SB060CP0*RBC
51	0.63	0.286	3,070	13,660	1,490	6,630	N/A	N/A	N/A	N/A	N/A	N/A	N/A	N/A	SC060CP0*RBC
39	1.16	0.526	4,450	19,790	2,580	11,480	N/A	N/A	N/A	N/A	N/A	N/A	N/A	N/A	SD060CP0*RBC
27	2.70	1.225	7,620	33,900	4,660	20,730	N/A	N/A	N/A	N/A	N/A	N/A	N/A	N/A	SF060CP0*RBC
21	5.10	2.313	11,490	51,110	8,390	37,320	N/A	N/A	N/A	N/A	N/A	N/A	N/A	N/A	SG060CP0*RBC
81	0.30	0.136	2,050	9,120	850	3,780	N/A	N/A	N/A	N/A	N/A	N/A	N/A	N/A	SA065CP0*RBC
68	0.47	0.213	2,760	12,280	1,200	5,340	N/A	N/A	N/A	N/A	N/A	N/A	N/A	N/A	SB065CP0*RBC
55	0.68	0.308	3,310	14,720	1,530	6,810	N/A	N/A	N/A	N/A	N/A	N/A	N/A	N/A	SC065CP0*RBC
42	1.22	0.553	4,790	21,310	2,650	11,790	N/A	N/A	N/A	N/A	N/A	N/A	N/A	N/A	SD065CP0*RBC
29	2.90	1.315	8,180	36,390	4,790	21,310	N/A	N/A	N/A	N/A	N/A	N/A	N/A	N/A	SF065CP0*RBC
22	5.40	2.449	12,040	53,560	8,520	37,900	N/A	N/A	N/A	N/A	N/A	N/A	N/A	N/A	SG065CP0*RBC
87	0.31	0.141	2,200	9,790	870	3,870	N/A	N/A	N/A	N/A	N/A	N/A	N/A	N/A	SA070CP0*RBC
73	0.50	0.227	2,970	13,210	1,240	5,520	N/A	N/A	N/A	N/A	N/A	N/A	N/A	N/A	SB070CP0*RBC
59	0.73	0.331	3,550	15,790	1,570	6,980	N/A	N/A	N/A	N/A	N/A	N/A	N/A	N/A	SC070CP0*RBC
45	1.31	0.594	5,130	22,820	2,730	12,140	N/A	N/A	N/A	N/A	N/A	N/A	N/A	N/A	SD070CP0*RBC
31	3.20	1.451	8,750	38,920	4,920	21,890	N/A	N/A	N/A	N/A	N/A	N/A	N/A	N/A	SF070CP0*RBC
24	5.80	2.631	13,130	58,410	8,880	39,500	N/A	N/A	N/A	N/A	N/A	N/A	N/A	N/A	SG070CP0*RBC
93	0.34	0.154	2,350	10,450	890	3,960	N/A	N/A	N/A	N/A	N/A	N/A	N/A	N/A	SA075CP0*RBC
78	0.53	0.240	3,170	14,100	1,280	5,690	N/A	N/A	N/A	N/A	N/A	N/A	N/A	N/A	SB075CP0*RBC
63	0.78	0.354	3,790	16,860	1,600	7,120	N/A	N/A	N/A	N/A	N/A	N/A	N/A	N/A	SC075CP0*RBC
48	1.41	0.640	5,470	24,330	2,800	12,460	N/A	N/A	N/A	N/A	N/A	N/A	N/A	N/A	SD075CP0*RBC
33	3.40	1.542	9,310	41,410	5,040	22,420	N/A	N/A	N/A	N/A	N/A	N/A	N/A	N/A	SF075CP0*RBC
25	6.10	2.767	13,680	60,850	8,960	39,860	N/A	N/A	N/A	N/A	N/A	N/A	N/A	N/A	SG075CP0*RBC
99	0.38	0.172	2,500	11,120	910	4,050	N/A	N/A	N/A	N/A	N/A	N/A	N/A	N/A	SA080CP0*RBC
83	0.57	0.259	3,370	14,990	1,280	5,690	N/A	N/A	N/A	N/A	N/A	N/A	N/A	N/A	SB080CP0*RBC
67	0.84	0.381	4,030	17,930	1,650	7,340	N/A	N/A	N/A	N/A	N/A	N/A	N/A	N/A	SC080CP0*RBC
51	1.53	0.694	5,810	25,840	2,860	12,720	N/A	N/A	N/A	N/A	N/A	N/A	N/A	N/A	SD080CP0*RBC
35	3.50	1.588	9,880	43,950	5,140	22,860	N/A	N/A	N/A	N/A	N/A	N/A	N/A	N/A	SF080CP0*RBC
27	6.50	2.948	14,770	65,700	9,300	41,370	N/A	N/A	N/A	N/A	N/A	N/A	N/A	N/A	SG080CP0*RBC
111	0.44	0.200	2,810	12,500	940	4,180	N/A	N/A	N/A	N/A	N/A	N/A	N/A	N/A	SA090CP0*RBC
93	0.66	0.299	3,780	16,810	1,330	5,920	N/A	N/A	N/A	N/A	N/A	N/A	N/A	N/A	SB090CP0*RBC
75	0.94	0.426	4,510	20,060	1,730	7,700	N/A	N/A	N/A	N/A	N/A	N/A	N/A	N/A	SC090CP0*RBC
57	1.72	0.780	6,500	28,910	2,970	13,210	N/A	N/A	N/A	N/A	N/A	N/A	N/A	N/A	SD090CP0*RBC
39	3.90	1.769	11,000	48,930	5,360	23,840	N/A	N/A	N/A	N/A	N/A	N/A	N/A	N/A	SF090CP0*RBC
30	7.20	3.266	16,420	73,040	9,720	43,240	N/A	N/A	N/A	N/A	N/A	N/A	N/A	N/A	SG090CP0*RBC
123	0.50	0.227	3,110	13,830	990	4,400	N/A	N/A	N/A	N/A	N/A	N/A	N/A	N/A	SA100CP0*RBC
103	0.73	0.331	4,190	18,640	1,400	6,230	N/A	N/A	N/A	N/A	N/A	N/A	N/A	N/A	SB100CP0*RBC
83	1.06	0.481	4,990	22,200	1,781	7,920	N/A	N/A	N/A	N/A	N/A	N/A	N/A	N/A	SC100CP0*RBC
63	1.88	0.853	7,180	31,940	3,070	13,660	N/A	N/A	N/A	N/A	N/A	N/A	N/A	N/A	SD100CP0*RBC
43	4.30	1.950	12,130	53,960	5,550	24,690	N/A	N/A	N/A	N/A	N/A	N/A	N/A	N/A	SF100CP0*RBC
33	7.90	3.583	18,060	80,330	10,040	44,660	N/A	N/A	N/A	N/A	N/A	N/A	N/A	N/A	SG100CP0*RBC

Refer to the Engineering section for load and speed limitations.

RADIAL CONTACT, C-TYPE

THIN SECTION BALL BEARINGS

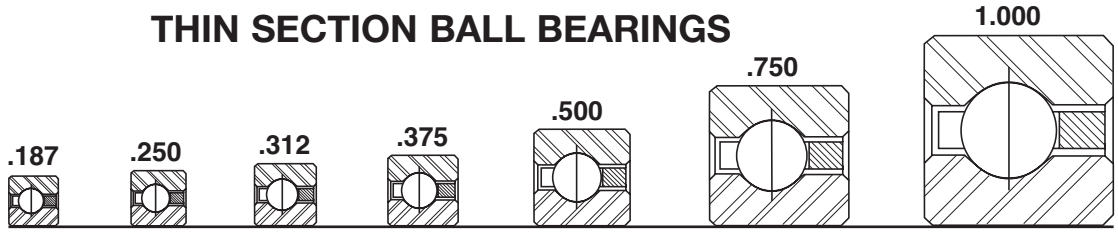

Series:	SAA	SA	SB	SC	SD	SF	SG
Cross Section Size:	3/16"	1/4"	5/16"	3/8"	1/2"	3/4"	1"

PART NUMBER*	NOMINAL DIMENSIONS												
	B Bore		D Outside Diameter		W Width		Land Diameter L_i -Inner Ring		Land Diameter L_o -Outer Ring		f_1 Housing Fillet		Ball Diameter
	in.	mm	in.	mm	in.	mm	in.	mm	in.	mm	in.	mm	in.
SA110CP0*RBC	11.0000	279.400	11.5000	292.100	0.2500	6.350	11.188	284.18	11.313	287.35	0.025	0.64	1/8
SB110CP0*RBC	11.0000	279.400	11.6250	295.275	0.3125	7.938	11.234	285.34	11.391	289.33	0.032	0.81	5/32
SC110CP0*RBC	11.0000	279.400	11.7500	298.450	0.3750	9.525	11.281	286.54	11.469	291.31	0.040	1.02	3/16
SD110CP0*RBC	11.0000	279.400	12.0000	304.800	0.5000	12.700	11.375	288.93	11.625	295.28	0.060	1.52	1/4
SF110CP0*RBC	11.0000	279.400	12.5000	317.500	0.7500	19.050	11.563	293.70	11.938	303.23	0.080	2.03	3/8
SG110CP0*RBC	11.0000	279.400	13.0000	330.200	1.0000	25.400	11.750	298.45	12.250	311.15	0.080	2.03	1/2
SA120CP0*RBC	12.0000	304.800	12.5000	317.500	0.2500	6.350	12.188	309.58	12.313	312.75	0.025	0.64	1/8
SB120CP0*RBC	12.0000	304.800	12.6250	320.675	0.3125	7.938	12.234	310.74	12.391	314.73	0.032	0.81	5/32
SC120CP0*RBC	12.0000	304.800	12.7500	323.850	0.3750	9.525	12.281	311.94	12.469	316.71	0.040	1.02	3/16
SD120CP0*RBC	12.0000	304.800	13.0000	330.200	0.5000	12.700	12.375	314.33	12.625	320.68	0.060	1.52	1/4
SF120CP0*RBC	12.0000	304.800	13.5000	342.900	0.7500	19.050	12.563	319.10	12.938	328.63	0.080	2.03	3/8
SG120CP0*RBC	12.0000	304.800	14.0000	355.600	1.0000	25.400	12.750	323.85	13.250	336.55	0.080	2.03	1/2
SB140CP0*RBC	14.0000	355.600	14.6250	371.475	0.3125	7.938	14.234	361.54	14.391	365.53	0.032	0.81	5/32
SC140CP0*RBC	14.0000	355.600	14.7500	374.650	0.3750	9.525	14.281	362.74	14.469	367.51	0.040	1.02	3/16
SD140CP0*RBC	14.0000	355.600	15.0000	381.000	0.5000	12.700	14.375	365.13	14.625	371.48	0.060	1.52	1/4
SF140CP0*RBC	14.0000	355.600	15.5000	393.700	0.7500	19.050	14.563	369.90	14.938	379.43	0.080	2.03	3/8
SG140CP0*RBC	14.0000	355.600	16.0000	406.400	1.0000	25.400	14.750	374.65	15.250	387.35	0.080	2.03	1/2
SB160CP0*RBC	16.0000	406.400	16.6250	422.275	0.3125	7.938	16.234	412.34	16.391	416.33	0.032	0.81	5/32
SC160CP0*RBC	16.0000	406.400	16.7500	425.450	0.3750	9.525	16.281	413.54	16.469	418.31	0.040	1.02	3/16
SD160CP0*RBC	16.0000	406.400	17.0000	431.800	0.5000	12.700	16.375	415.93	16.625	422.28	0.060	1.52	1/4
SF160CP0*RBC	16.0000	406.400	17.5000	444.500	0.7500	19.050	16.563	420.70	16.938	430.23	0.080	2.03	3/8
SG160CP0*RBC	16.0000	406.400	18.0000	457.200	1.0000	25.400	16.750	425.45	17.250	438.15	0.080	2.03	1/2
SB180CP0*RBC	18.0000	457.200	18.6250	473.075	0.3125	7.938	18.234	463.14	18.391	467.13	0.032	0.81	5/32
SC180CP0*RBC	18.0000	457.200	18.7500	476.250	0.3750	9.525	18.281	464.34	18.469	469.11	0.040	1.02	3/16
SD180CP0*RBC	18.0000	457.200	19.0000	482.600	0.5000	12.700	18.375	466.73	18.625	473.08	0.060	1.52	1/4
SF180CP0*RBC	18.0000	457.200	19.5000	495.300	0.7500	19.050	18.563	471.50	18.938	481.03	0.080	2.03	3/8
SG180CP0*RBC	18.0000	457.200	20.0000	508.000	1.0000	25.400	18.750	476.25	19.250	488.95	0.080	2.03	1/2
SB200CP0*RBC	20.0000	508.000	20.6250	523.875	0.3125	7.938	20.234	513.94	20.391	517.93	0.032	0.81	5/32
SC200CP0*RBC	20.0000	508.000	20.7500	527.050	0.3750	9.525	20.281	515.14	20.469	519.91	0.040	1.02	3/16
SD200CP0*RBC	20.0000	508.000	21.0000	533.400	0.5000	12.700	20.375	517.53	20.625	523.88	0.060	1.52	1/4
SF200CP0*RBC	20.0000	508.000	21.5000	546.100	0.7500	19.050	20.563	522.30	20.938	531.83	0.080	2.03	3/8
SG200CP0*RBC	20.0000	508.000	22.0000	558.800	1.0000	25.400	20.750	527.05	21.250	539.75	0.080	2.03	1/2
SC250CP0*RBC	25.0000	635.000	25.7500	654.050	0.3750	9.525	25.281	642.14	25.469	646.91	0.040	1.02	3/16
SD250CP0*RBC	25.0000	635.000	26.0000	660.400	0.5000	12.700	25.375	644.53	25.625	650.88	0.060	1.52	1/4
SF250CP0*RBC	25.0000	635.000	26.5000	673.100	0.7500	19.050	25.563	649.30	25.938	658.83	0.080	2.03	3/8
SG250CP0*RBC	25.0000	635.000	27.0000	685.800	1.0000	25.400	25.750	654.05	26.250	666.75	0.080	2.03	1/2
SC300CP0*RBC	30.0000	762.000	30.7500	781.050	0.3750	9.525	30.281	769.14	30.469	773.91	0.040	1.02	3/16
SD300CP0*RBC	30.0000	762.000	31.0000	787.400	0.5000	12.700	30.375	771.53	30.625	777.88	0.060	1.52	1/4
SF300CP0*RBC	30.0000	762.000	31.5000	800.100	0.7500	19.050	30.563	776.30	30.938	785.83	0.080	2.03	3/8
SG300CP0*RBC	30.0000	762.000	32.0000	812.800	1.0000	25.400	30.750	781.05	31.250	793.75	0.080	2.03	1/2
SF350CP0*RBC	35.0000	889.000	36.5000	927.100	0.7500	19.050	35.563	903.30	35.938	912.83	0.080	2.03	3/8
SG350CP0*RBC	35.0000	889.000	37.0000	939.800	1.0000	25.400	35.750	908.05	36.250	920.75	0.080	2.03	1/2
SF400CP0*RBC	40.0000	1016.000	41.5000	1054.100	0.7500	19.050	40.563	1030.30	40.938	1039.83	0.080	2.03	3/8
SG400CP0*RBC	40.0000	1016.000	42.0000	1066.800	1.0000	25.400	40.750	1035.05	41.250	1047.75	0.080	2.03	1/2

*The alphanumeric identification system is used under license.

- 440C Stainless Steel
- Large Diameter
- Light Weight
- Small Cross Section
- Snap-Over Ball Separator

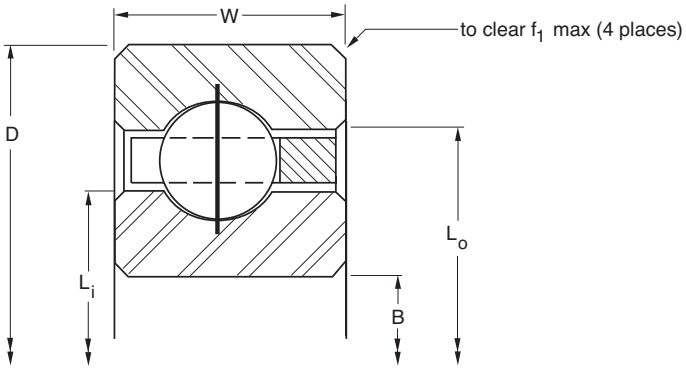

Ball Quantity	Approx. Weight		LOAD RATINGS												PART NUMBER*
			Radial				Thrust				Moment				
			Static		Dynamic		Static		Dynamic		Static		Dynamic		
	lbs.	kg	lbf	N	lbf	N	lbf	N	lbf	N	lbf - in	Nm	lbf - in	Nm	
135	0.52	0.236	3,410	15,170	1,030	4,580	N/A	N/A	N/A	N/A	N/A	N/A	N/A	N/A	SA110CP0*RBC
113	0.75	0.340	4,590	20,420	1,464	6,510	N/A	N/A	N/A	N/A	N/A	N/A	N/A	N/A	SB110CP0*RBC
91	1.16	0.526	5,470	24,330	1,879	8,360	N/A	N/A	N/A	N/A	N/A	N/A	N/A	N/A	SC110CP0*RBC
69	2.06	0.934	7,870	35,010	3,180	14,150	N/A	N/A	N/A	N/A	N/A	N/A	N/A	N/A	SD110CP0*RBC
47	4.80	2.177	13,260	58,980	5,833	25,950	N/A	N/A	N/A	N/A	N/A	N/A	N/A	N/A	SF110CP0*RBC
36	8.60	3.901	19,700	87,630	10,360	46,080	N/A	N/A	N/A	N/A	N/A	N/A	N/A	N/A	SG110CP0*RBC
147	0.56	0.254	3,720	16,550	1,078	4,800	N/A	N/A	N/A	N/A	N/A	N/A	N/A	N/A	SA120CP0*RBC
123	0.83	0.376	5,000	22,240	1,539	6,850	N/A	N/A	N/A	N/A	N/A	N/A	N/A	N/A	SB120CP0*RBC
99	1.25	0.567	5,950	26,470	1,974	8,780	N/A	N/A	N/A	N/A	N/A	N/A	N/A	N/A	SC120CP0*RBC
75	2.25	1.021	8,550	38,030	3,320	14,770	N/A	N/A	N/A	N/A	N/A	N/A	N/A	N/A	SD120CP0*RBC
51	5.20	2.359	14,390	64,010	6,105	27,160	N/A	N/A	N/A	N/A	N/A	N/A	N/A	N/A	SF120CP0*RBC
39	9.30	4.218	21,340	94,930	10,690	47,550	N/A	N/A	N/A	N/A	N/A	N/A	N/A	N/A	SG120CP0*RBC
143	1.05	0.476	5,810	25,840	1,680	7,470	N/A	N/A	N/A	N/A	N/A	N/A	N/A	N/A	SB140CP0*RBC
115	1.52	0.689	6,910	30,740	2,154	9,580	N/A	N/A	N/A	N/A	N/A	N/A	N/A	N/A	SC140CP0*RBC
87	2.73	1.238	9,920	44,130	3,460	15,390	N/A	N/A	N/A	N/A	N/A	N/A	N/A	N/A	SD140CP0*RBC
59	6.00	2.722	16,650	74,060	6,620	29,450	N/A	N/A	N/A	N/A	N/A	N/A	N/A	N/A	SF140CP0*RBC
45	10.80	4.899	24,620	109,520	11,280	50,180	N/A	N/A	N/A	N/A	N/A	N/A	N/A	N/A	SG140CP0*RBC
163	1.20	0.544	6,620	29,450	1,812	8,060	N/A	N/A	N/A	N/A	N/A	N/A	N/A	N/A	SB160CP0*RBC
131	1.73	0.785	7,880	35,050	2,321	10,320	N/A	N/A	N/A	N/A	N/A	N/A	N/A	N/A	SC160CP0*RBC
99	3.10	1.406	11,290	50,220	3,688	16,410	N/A	N/A	N/A	N/A	N/A	N/A	N/A	N/A	SD160CP0*RBC
67	7.10	3.221	18,900	84,070	7,104	31,600	N/A	N/A	N/A	N/A	N/A	N/A	N/A	N/A	SF160CP0*RBC
51	12.30	5.579	27,910	124,150	11,820	52,580	N/A	N/A	N/A	N/A	N/A	N/A	N/A	N/A	SG160CP0*RBC
183	1.35	0.612	7,440	33,090	1,936	8,610	N/A	N/A	N/A	N/A	N/A	N/A	N/A	N/A	SB180CP0*RBC
147	1.94	0.880	8,840	39,320	2,478	11,020	N/A	N/A	N/A	N/A	N/A	N/A	N/A	N/A	SC180CP0*RBC
111	3.48	1.579	12,650	56,270	3,933	17,490	N/A	N/A	N/A	N/A	N/A	N/A	N/A	N/A	SD180CP0*RBC
75	7.90	3.583	21,160	94,120	7,557	33,620	N/A	N/A	N/A	N/A	N/A	N/A	N/A	N/A	SF180CP0*RBC
57	13.70	6.214	31,190	138,740	12,367	55,010	N/A	N/A	N/A	N/A	N/A	N/A	N/A	N/A	SG180CP0*RBC
203	1.50	0.680	8,250	36,700	2,053	9,130	N/A	N/A	N/A	N/A	N/A	N/A	N/A	N/A	SB200CP0*RBC
163	2.16	0.980	9,800	43,590	2,626	11,680	N/A	N/A	N/A	N/A	N/A	N/A	N/A	N/A	SC200CP0*RBC
123	3.85	1.746	14,020	62,360	4,164	18,520	N/A	N/A	N/A	N/A	N/A	N/A	N/A	N/A	SD200CP0*RBC
83	8.90	4.037	23,420	104,180	7,986	35,520	N/A	N/A	N/A	N/A	N/A	N/A	N/A	N/A	SF200CP0*RBC
63	15.80	7.167	34,470	153,330	13,044	58,020	N/A	N/A	N/A	N/A	N/A	N/A	N/A	N/A	SG200CP0*RBC
203	2.69	1.220	12,200	54,270	2,962	13,180	N/A	N/A	N/A	N/A	N/A	N/A	N/A	N/A	SC250CP0*RBC
153	4.79	2.173	17,440	77,580	4,689	20,860	N/A	N/A	N/A	N/A	N/A	N/A	N/A	N/A	SD250CP0*RBC
103	10.90	4.944	29,060	129,270	8,963	39,870	N/A	N/A	N/A	N/A	N/A	N/A	N/A	N/A	SF250CP0*RBC
78	19.50	8.845	42,680	189,850	14,591	64,900	N/A	N/A	N/A	N/A	N/A	N/A	N/A	N/A	SG250CP0*RBC
243	3.21	1.456	14,610	64,990	3,260	14,500	N/A	N/A	N/A	N/A	N/A	N/A	N/A	N/A	SC300CP0*RBC
183	5.73	2.599	20,860	92,790	5,153	22,920	N/A	N/A	N/A	N/A	N/A	N/A	N/A	N/A	SD300CP0*RBC
123	13.00	5.897	34,700	154,350	9,828	43,720	N/A	N/A	N/A	N/A	N/A	N/A	N/A	N/A	SF300CP0*RBC
93	23.30	10.569	50,890	226,370	15,963	71,010	N/A	N/A	N/A	N/A	N/A	N/A	N/A	N/A	SG300CP0*RBC
143	15.10	6.849	40,350	179,490	10,603	47,160	N/A	N/A	N/A	N/A	N/A	N/A	N/A	N/A	SF350CP0*RBC
108	27.10	12.292	59,100	262,890	17,195	76,490	N/A	N/A	N/A	N/A	N/A	N/A	N/A	N/A	SG350CP0*RBC
163	17.20	7.802	45,990	204,570	11,302	50,270	N/A	N/A	N/A	N/A	N/A	N/A	N/A	N/A	SF400CP0*RBC
123	30.80	13.971	67,310	299,410	18,307	81,430	N/A	N/A	N/A	N/A	N/A	N/A	N/A	N/A	SG400CP0*RBC

Refer to the Engineering section for load and speed limitations.